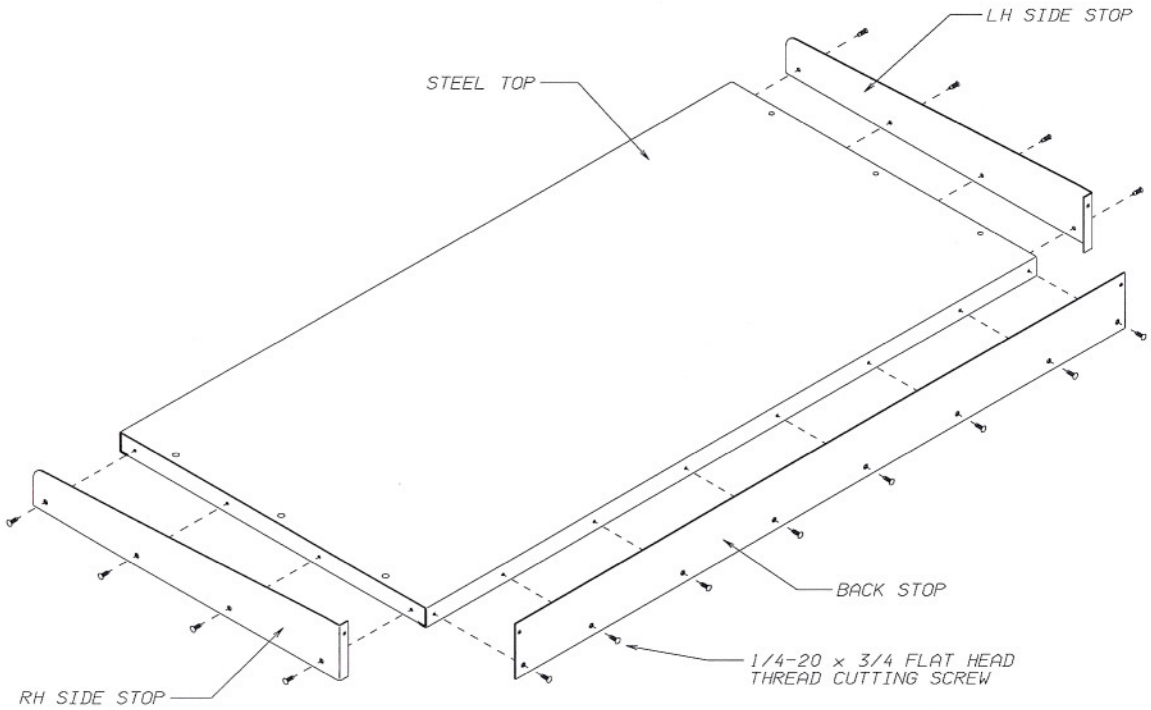


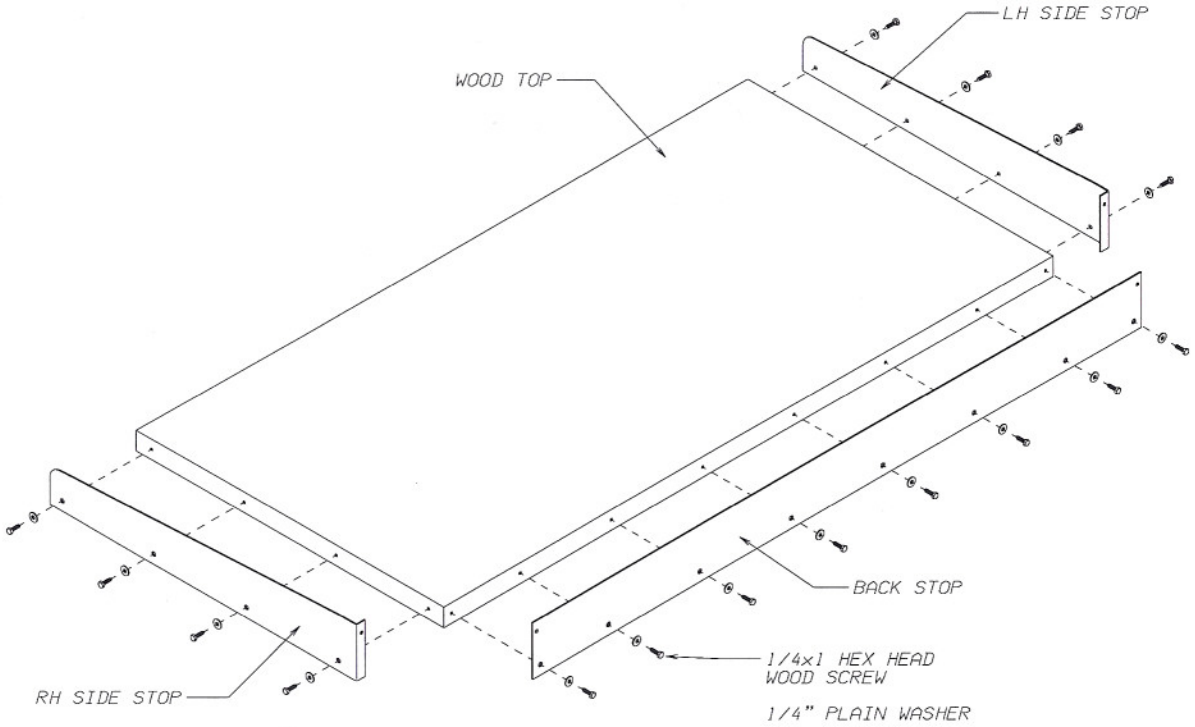


## STEEL TOP INSTALL

1) ATTACH BACKSTOP TO TOP PAN WITH SUPPLIED THREAD CUTTING SCREWS AS SHOWN. BE SURE THAT THE COUNTERSINK ON THE BACKSTOP IS FACING OUTWARDS.
2) ATTACH SIDE STOPS AS SHOWN IN THE SAME MANNER. BE SURE THE FORM IS BEHIND THE BACKSTOP.
3) CONNECT THE BACKSTOP TO THE SIDE STOPS AS SHOWN WITH 1/4-20 SCREWS AND NUTS.

## WOOD TOP INSTALL

1) LINE UP BOTTOM OF BACK STOP AND SIDE STOPS WITH THE BOTTOM EDGE OF THE TOP. USING THE HOLES IN THE BACKSTOP AND SIDE STOPS AS A GUIDE, DRILL 13/64" DIAMETER x 1" DEEP HOLES INTO THE TOP.
2) ATTACH THE BACKSTOP AND SIDE STOPS USING 1/4" LAG SCREWS AND WASHERS.
3) CONNECT THE BACKSTOP TO THE SIDE STOPS AS SHOWN WITH 1/4-20 SCREWS AND NUTS.

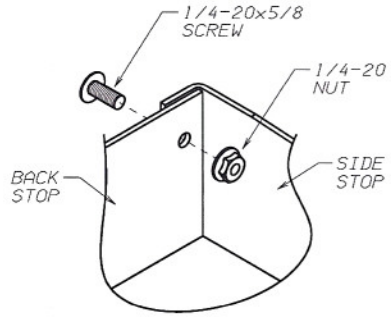


ATTACHMENT OF BACK TO SIDE STOP

| SYM | REVISION | ECN | DATE | BY |
|---|---|---|---|---|
| 1 | REL FOR PROD | 0585 | 07-29-09 | RE |

| | | |
|---|---|---|
| RAW PART # 103660 | | |
| DATE 07-29-09 | DRAWN BY RE | CHECKED BY DV |

LYON
LYON WORKSPACE PRODUCTS
PO BOX 671 AURORA, IL 60507
(800) 323-0082 FAX: (800) 367-6681

MDCII — DESCRIPTION: INSTALL 60/72W 30D SIDE/BACK STOP

SHEET –
DWG NUMBER SS1439
REV 1

NOTICE: THIS IS A CONFIDENTIAL DISCLOSURE LOANED BY SYCAMORE SYSTEMS FOR REFERENCE PURPOSES ONLY