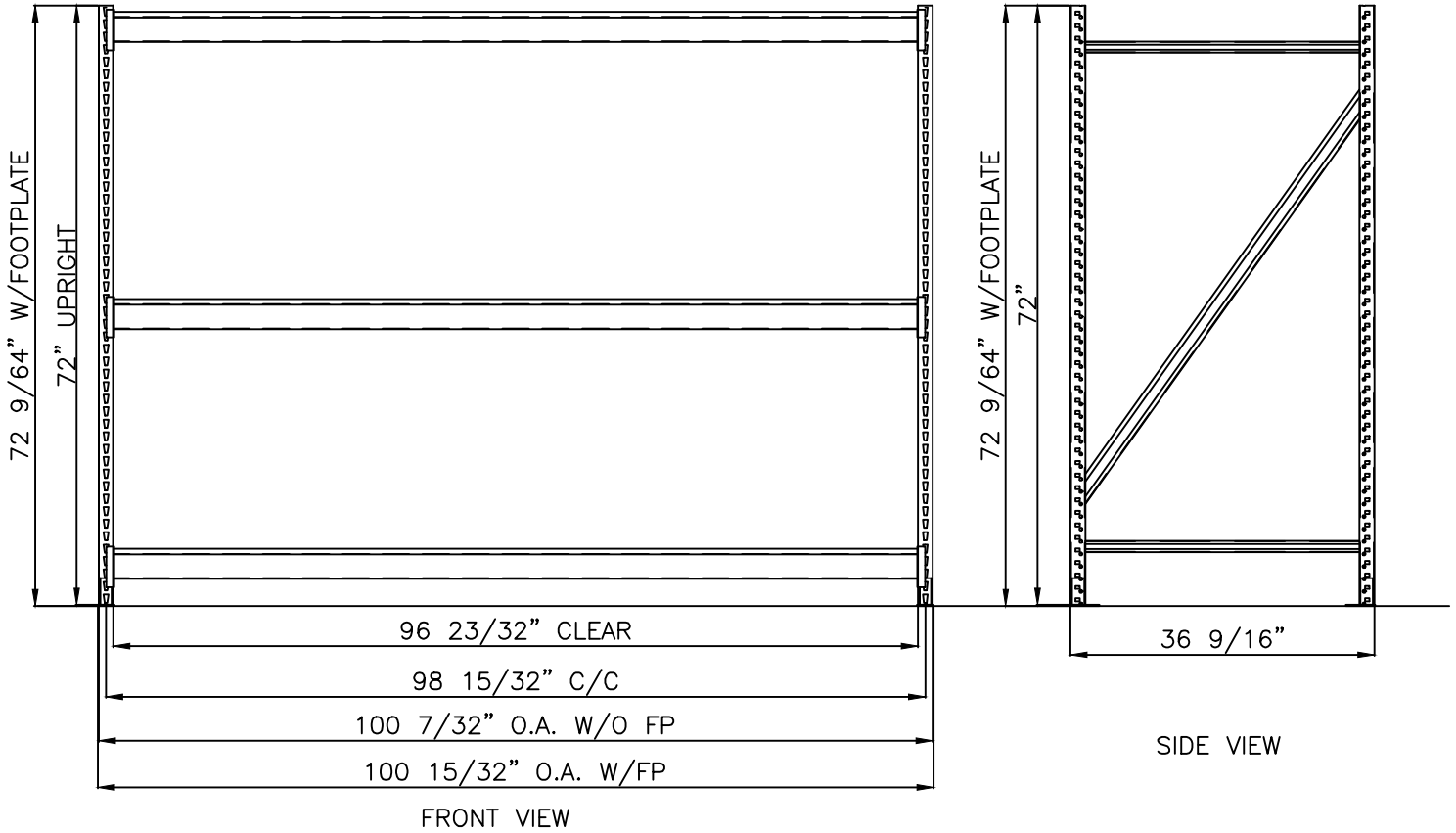

96"W X 36"D X 72"H
BULK STORAGE RACK
WITHOUT DECKING

NO	DATE	REV DESCRIPTION	BY

LYON METAL PRODUCTS
P.O. BOX 671
AURORA, IL 60507
630-892-8941

ISO 9001 A5459

DRAWN BY: RC DATE: 5/12/2020

SCALE: N.T.S.

DWG NO: 96WX36DX72HX3L